Funkwerk Avionics GmbH
Gewerbestraße 2
D-86875 Waal
Germany

phone.: +49-8246 9699 0
fax.: +49-8246 1049
E-mail:
service@funkwerk-avionics.com
www.funkwerk-avionics.com

funkwerk avionics

ATR500
VHF Communication Transceiver

P/N 500-(0XX)-(0XX)
P/N 500-(1XX)-(1XX)

Operation and Installation

(Document-No. 01.1251.010.71e)

funkwerk avionics

Change History

Revision	Date	Description of Change
1.00	09.01.2006	First Release
1.01	07.02.2007	New chapter "Customer Support"
1.02	26.02.2007	Troubleshooting if CON was misadjusted
1.03	21.03.2007	Description of equipment prior to P/N 500(1XX)-(1XX)
1.04	02.04.2007	Microphones / headphones: parallel connection
1.05	30.05.2007	MIC setting completed
1.06	27.07.2007	External Fuse 4 A
2.00	15.06.2009	FAV - First Release
2.01	02.08.2010	Added information on connectors

List of Service-Bulletins (SB)

Service-Bulletins have to be inserted into this manual and to be enlisted in the following table.

SB Number	Rev. No	Issue Date	Entry Date	Name

Survey of Variants

Part Number	Description
P/N 500(0XX)-(0XX)	Background illumination could externally be activated but it is not adjustable
P/N 500(1XX)-(1XX) ab SW V2.0	Background illumination is adjustable within the INIT-Menu as well as externally
P/N 500(1XX)-(1XX) ab SW V2.5	Background Illumination is adjustable within the (basic) Menu as well as externally

INHALT

1 General 6
1.1 Symbols 6
1.2 Abbreviations 6
1.3 Customer Support 7
1.4 Features 7
2 Operation 8
2.1 Controls 8
2.2 ON/OFF 10
2.3 Display 10
2.4 Basic Settings 13
2.4.1 VOL – Volume 13
2.4.2 SQ – Squelch 13
2.4.3 VOX – Voice Detection (Threshold of IC-Function) 13
2.4.4 DIM – Background Illumination 14
2.4.5 CON – Contrast 14
2.5 Frequency Settings 15
2.5.1 Manual Input 15
2.5.2 Select frequency from memory position 15
2.5.3 Save a new frequency 15
2.6 Transmission 16
2.7 Reception 16
2.8 Enhanced Settings 17
2.8.1 INIT – Menu 17
2.8.2 Return Mode – Menu 19
2.9 Deviations in other variants 20
3 Installation 21
3.1 Advices 21
3.2 Telecommunication Data 21
3.3 Scope of Delivery 21
3.4 Unpacking and Inspecting of the Equipment 22
3.5 Mounting 22
3.6 Equipment Connections 23

3.6.1 Microphone-Connection 23
3.6.2 Headset-Connection 23
3.6.3 Background Illumination 24
3.7 Wiring 25
3.7.1 Conductor Cross Section 25
3.7.2 Wiring Single-Seater 25
3.7.3 Wiring Double-Seater with Intercom 26
3.8 Antenna 27
3.8.1 Antenna Selection 27
3.8.2 Installation Recommendation 27
3.9 Microphone Settings 27
3.10 Post-Installation Check 28
3.11 Starting Up 29
3.12 Accessories 29
3.13 Drawings 30
3.13.1 Dimensions 30
3.13.2 Mounting Advices 30
4 APPENDIX 31
4.1 Technical Data 31
4.2 Environmental Conditions 33

1 GENERAL

This manual contains information about the physical, mechanical and electrical characteristics as well as information about installation and operation of the VHF communication transceiver ATR500.

The operation is described concerning devices with software release V2.5 or higher. Any deviations from preceding hard- and software releases are highlighted at the end of chapter two under 2.9 "Deviations in other variants".

1.1 Symbols

	Advices whose non-observance can cause radiation damage to the human body or ignition of combustible materials.
	Advices whose non-observance can cause damage to the device or other parts of the equipment.
	Supplementary Information

1.2 Abbreviations

Abk.	Bezeichnung	Definition
PTT	Push to Talk	activates transmitter
VOX	Voice Recognition	Intercom is activated by talking
IC	Intercom	On board communication
SQ	Squelch	
DIM	Background Illumination	Display Brightness
CON	Contrast	Display Contrast

1.3 Customer Support

In order to facilitate a rapid handling of handling of shipments, please follow the instructions of the input guide "Reshipment RMA" provided at the **Service**-Area within the Funkwerk Avionics web portal www.funkwerk-avionics.com.

	Any suggestions for improvement of our manuals are welcome. Contact: service@funkwerk-avionics.com.

	Informations on software updates are available at Funkwerk Avionics.

1.4 Features

- VHF Communication Transceiver for installation in aircraft
- operating frequency range from 118.000 to 136.975 MHz
- 25 kHz channel spacing (760 channels)
- panel mounting in a 57 mm cut-out
- memory capacity for 9 user defined frequency entries

	To avoid unintentional permanent transmit operation, the transmitter automatically stops transmission after two Minutes of uninterrupted operation.

2 OPERATION

2.1 Controls

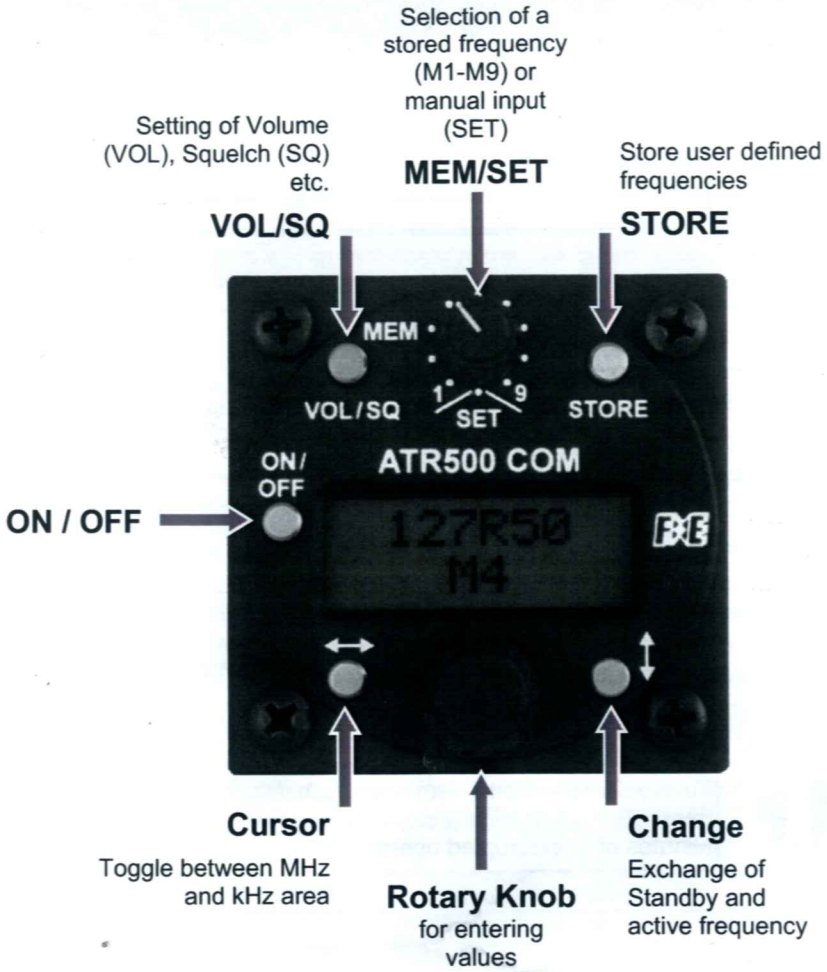

ON OFF	On/Off	Switch On press button for approx. 0,5 s Switch Off press button for approx. 3 s
VOL/SQ	VOL/SQ	Navigate through Basic Settings VOL, SQ, VOX, DIM und CON
	CHANGE	1. Toggle between active and standby frequency 2. Exit Basic Settings
STORE	STORE	Storing of currently active frequency onto the selected memory position (refer to section 2.5.3 page 15)
	MEM/SET	Rotary Knob to either select a stored frequency from a memory position or enable manual input of frequencies (MEM/SET Knob in position SET) (refer to section. 2.5 page 15)
	CURSOR	1. Change between setting of MHz and kHz digits 2. Exit Basic Settings
	ROTARY KNOB	Input and adjusting of values (frequencies, level, etc…)

2.2 ON/OFF

Switch ON: ON OFF press button for 0.5 s

Switch OFF: ON OFF press button for 3 s

After turning-on the display appears as follows:

Device Name

Software-Version

(Example)

The ATR500 starts corresponding to the position of the MEM/SET rotary knob either with a specific memory position (M1-M9) or with manual frequency-entering (SET).

	The ATR500 starts with the last settings made.

2.3 Display

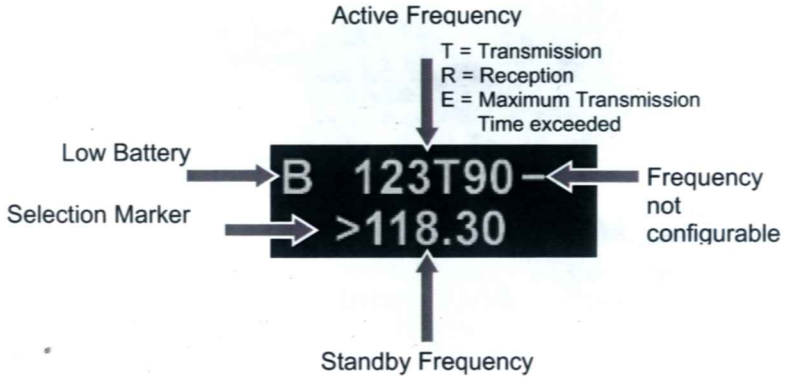

The display of the ATR500 consists of two rows. Apart from the INIT-Menu (see 2.8.1) the upper row always shows the active frequency.

The **upper row** presents the currently active frequency and besides following additional information:

Display	Meaning	Remark
B	Low Battery <10,5V	Flashing "B" displayed in the upper left corner
-	Frequency not configurable **Return device to manufacturer**	If a "– "is displayed behind the frequency it is not configurable, Reception - and Transmission is not possible

	In some cases „–" is displayed for less than 1 second. This means no malfunction and could be due to extreme radio interferences.

In the **lower row** several settings are indicated and configurable (see following table).

Display	Meaning	Remark
Mx	Memory Position	Indicates the selected memory position
VOL	Volume	
SQ	Squelch	
VOX	Voice Detection	Intercom controlled by voice
DIM	Background Illumination	
CON	Contrast	
T	Transmitter active	
R	Receiver active	
E	Transmission interrupted	Max. Time of Transmission of 2 minutes exceeded
<>	Selecting Markers for setting of Standby Frequency	Indicates which parts/digits of the frequency MHz or KHz are configurable

The different entries of the basic settings can be accessed with **VOL/SQ**.

1. VOL Volume
2. SQ Squelch
3. VOX Configuration of the threshold value in order to activate Intercom
4. DIM Background Illumination
5. CON Contrast
6. Back to volume setting.

The values are adjusted with the lower rotary knob.

The return to the normal display screen (frequency indication) could be configured differently (see 2.8.2). In principle this happens by pressing ⇔ or ⇕. Additionally, the return to the frequency indication can happen automatically after 5 seconds. Which requires the corresponding setting in the „Return Mode" – menu (see 2.8.2). The automatic return to the frequency indication is a pre-configured factory setting.

2.4 Basic Settings

2.4.1 VOL – Volume

By pressing **VOL/SQ** once, the volume can be configured by using the lower rotary knob.

```
118.90
VOL: 10
```

Range: 01 - 16

ℹ	The VOL-Setting only affects the received signal, not the Intercom level, which is pre-configured by factory.

2.4.2 SQ – Squelch

By pressing **VOL/SQ** twice, squelch can be configured by using the lower rotary knob.

```
118.90
SQ : 03
```

Range: 01 – 10

ℹ	The default Squelch setting 03 ... 05. Higher values could suppress weak signals. Squelch does not impact the Intercom.

2.4.3 VOX – Voice Detection (Threshold of IC-Function)

By pressing **VOL/SQ** three times, the voice detection threshold can be configured by using the lower rotary knob.

VOX defines the volume threshold at which normal noise during flight is not transferred into the headset. Only an additional voice signal activates intercom operation.

The higher the value, the louder you need to speak in order to activate the Intercom connection.

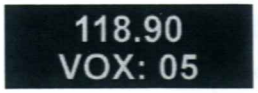

Range: 01 – 10

In case of a noisy background or uncompensated microphones it is possible to deactivate VOX with VOX: 01. If done so, Intercom is enabled by use of the Intercom-Switch.

> In order to configure the microphone sensitivity (see 2.8.1.1) VOX should be set to VOX: 05.

2.4.4 DIM – Background Illumination

By pressing **VOL/SQ** four times, the background illumination can be adjusted by using the lower rotary knob.

This requires a respective wiring (see 3.7).

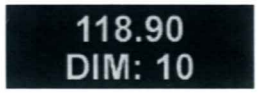

Range: 01 - 10

2.4.5 CON – Contrast

By pressing **VOL/SQ** five times, the contrast can be adjusted by using the lower rotary knob.

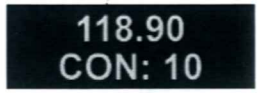

Range: 01 - 10

Press **VOL/SQ** once more to return to VOL setting.

2.5 Frequency Settings

2.5.1 Manual Input

turn **MEM** in position **SET**

With ⇔ the input area (MHz or kHz) can be selected:

The selected value is then adjusted with the lower rotary knob.

Now the modified Standby frequency can be activated by pressing ↕ (exchanges active and Standby frequency)

2.5.2 Select frequency from memory position

Turn memory position selector **MEM** (M1 … M9)

The stored frequency appears and is set as active frequency; hence it is displayed in the upper row of the screen.

2.5.3 Save a new frequency

In order to save a new frequency this needs to be manually entered and activated according to the steps described in section 2.5.1.

Select memory position with **MEM** (M1 … M9).

Memory place and the corresponding frequency are displayed and active.

The priory manual entered frequency is kept in memory, but is not yet saved.

Press **STORE** to finally store the kept frequency on the selected memory position. The priory stored frequency is overwritten.

2.6 Transmission

Pushing PTT starts transmission on the selected frequency shown in the upper line. This operation is indicated by "T".

„T" indicates correct operation of the transmitter.

In order to avoid unintended transmission the transmitter stops after two minutes and the display changes from "T" to "E".
To re-start transmission, release PTT and push it again.

2.7 Reception

While receiving (squelch is open) "R" is shown.

2.8 Enhanced Settings

In the following section configurations beyond the basic settings are explained.

Within the **INIT Menu** two options are provided: reset to factory settings and the setting of the microphone sensitivity.

The **Return Mode Menu** enables to configure how the basic settings menu is left, automatically or manually (see 2.4).

Both menus are only accessible from the switched-off device by pressing a certain combination of buttons.

2.8.1 INIT – Menu

The Init-Menu is accessed by pressing ↔ while switching on with ON OFF.

Following functions are available:

- MIC - Configuration of the microphone level
- INIT - Reset to factory settings

The selection of the functions is done with the related button beside the respective menu entry. Any options represented in the upper row are selected with VOL/SQ and STORE (comparably for lower row, see figure below)

Therefore the INIT Menu is left with VOL/SQ. The device remains powered-on and returns to normal operation.

2.8.1.1 MIC-Settings

The microphone level simultaneously affects both MIC 1 and MIC 2. Therefore two equivalent standard microphones must be used to ensure successful intercom operation.

⚠	For setting MIC, VOX must be set to 5 previously (refer to section 2.4.3 page 13).

Within INIT menu press STORE to select MIC

EXIT
MIC: 05 Range: 01 - 32

The microphone level is adjusted with the lower rotary knob. A value of 01 reflects the lowest sensitivity. Usually a setting between 01…05 is done for normal avionic headsets.

The microphone level should be configured by use of a headset and speaking loudly and clearly until VOX is activated / deactivated satisfactorily.

In order to save the settings and to return to INIT menu press VOL/SQ.

2.8.1.2 INIT – Reset to factory settings

Within INIT menu press ↕. This resets the user defined settings as well as the basic settings (incl. MIC) to the factory settings. The factory settings are as follows:

MEM1	118.00	VOL	03
MEM2	127.00	SQ	08
MEM3	136.97	VOX	05
MEM4	127.50	MIC	05
MEM5	130.47	DIM	10
MEM6-9	118.00	CON	05

2.8.2 Return Mode – Menu

The return mode determines if the display automatically returns to Frequency View after changes by the user (VOL, SQ, VOX, etc.).

In frequency view this affects the lower line (Standby frequency or memory position) depending on the position of MEM/SET. The active frequency is visible at any time also while adjusting the basic settings.

The Return Mode menu is accessed by pressing ↕ while switching on with ON OFF.

EXIT
RETURN: Y Options: Y/N

The options Y/N (Yes/No) are selected with the lower rotary knob.

Meaning:

Y…Yes → activates the automatic return to the frequency view, after that the menu of the basic settings is left after 5 seconds.

N…No → once entered, the menu of the basic settings remains on the screen (VOL, SQ, VOX, etc.), the basic settings need to be left manually by pressing ⇔ or ↕.

In order to save settings and exit the menu press VOL/SQ.

2.9 Deviations in other variants

Any operation steps described in the preceding sections are referring to ATR500 devices with a software release V2.5 or higher. The following table summarizes the differences to software releases below V2.5.

Section within this manual	Deviation	Valid for
2.4.1 VOL – Volume	Value Range 0 to 32	SW < v2.5
2.4.4 DIM – Background Illumination	Configurable within LIGHT-Menu (accessible like Return Mode Menu ref. 2.8 ff) *before SW v2.0 only externally adjustable*	SW ≥ v2.0 SW < v2.5
2.4.5 CON – Contrast	Configurable within INIT-Menu	SW ≥ v1.0 SW < v2.5
2.8.1 INIT – Menu	Contains sub-menu to adjust contrast (CON)	SW ≥ v1.0 SW < v2.5
2.8.2 Return Mode – Menu	Not available	SW < v2.5

3 INSTALLATION

3.1 Advices

The following suggestions should be considered before installing.

The assigned installation company will supply wiring. For diagrams refer to 3.7 Wiring.

3.2 Telecommunication Data

Depending on your national telecommunications legislation, the following data may be required when applying for the aircraft radio station license:

Manufacturer:	Funkwerk Avionics GmbH
Type Designation:	ATR500
EASA Number:	LBA.O.10.911/113JTSO
Transmitter Power Output	6 W
Frequency:	118,000 – 136,975 MHz
Emission Designator:	6k00A3E

3.3 Scope of Delivery

Part Number	Description
ATR500	ATR500, 760-Channel-VHF Transceiver
ZUB3 (4 pieces)	Mounting screw ATR500
SSATR568	Connector (Only if no additional cable set is ordered)
01.1251.010.71e	User Manual „Operation and Installation“
	EASA Form 1

3.4 Unpacking and Inspecting of the Equipment

Carefully unpack the equipment and inspect for transport damages. If a damage claim has to be filed, save the shipping container and all packing materials as evidence to your claim.

	For storage or reshipment the original packaging should be used.

3.5 Mounting

- In cooperation with a maintenance shop, location and kind of the installation are specified. The maintenance shop can supply all cables. Suitable sets of cables are available from Funkwerk Avionics GmbH.
- Select a position away from heat sources. Care for adequate convection cooling.
- Leave sufficient space for the installation of cables and connectors.
- Avoid sharp bends and wiring close to control cables.
- Leave sufficient lead length for inspection or repair of the wiring of the connector.
- Bend the harness at the rear connectors to inhibit water droplets (formed due to condensation) from collecting in the connector.
- For mounting details/drawing refer to chapter 3.13.2 Mounting Advices.

	Please consider 3.6.1 Microphone-Connection BEFORE installation.

3.6 Equipment Connections

One 15 pin D-SUB miniature connector includes all electrical connections, except for the antenna

	The (+UB)-wire has to protected by circuit breaker (2 Amp.)!

3.6.1 Microphone-Connection

The device contains two microphone inputs:

MIC 1: switchable („Mic.Setting" Switch at the right hand side) for

- Standard - Microphones (factory setting)
- Dynamic Microphones

MIC 2: only for Standard-Microphones

The input for standard microphones is appropriate for input voltages of 50 mVpp to 2 Vpp. This input has a bias voltage of 8 V at 330 ohms. Sensitivity is adjustable in the init menu with MIC.

The input for dynamic microphones is appropriate for input voltages of 5 mVpp to 10 mVpp. This input has no bias. Use microphones of the same type, as the settings described in the following are always concerning both microphone inputs.

	Check setting of the MIC switch on the right side of the radio BEFORE mounting! (Factory setting: standard microphone) A maximum of two microphones may be connected parallel per microphone input.

3.6.2 Headset-Connection

Headphones may be connected parallel as long as the total impedance doesn't fall below 8 Ohm.

3.6.3 Background Illumination

- To switch off illumination connect „DISPLAY_LIGHTNING“ (PIN4) to „GND“ or leave it unconnected.
- Illumination can be varied using an input voltage (dimmer or switch) from 0 V ... +UB connected to „DISPLAY_LIGHTNING“ (PIN4).
  (0V for off, +UB for full brightness, in-between linear)
- Except for disengaged background illumination an additional setting is possible by the DIM-function (see 2.4.4, page 14).

3.7 Wiring

3.7.1 Conductor Cross Section

Power Supply (Power, GND): AWG20 (0,96 mm²)

Signals: AWG22 (0,38 mm²)

The conductors must be approved for aircraft use.

3.7.2 Wiring Single-Seater

The depicted wiring diagram is performed with the cable set BSKS500A, which is available as accessory. Cable sets can be obtained from www.funkwerk-avionics.com .

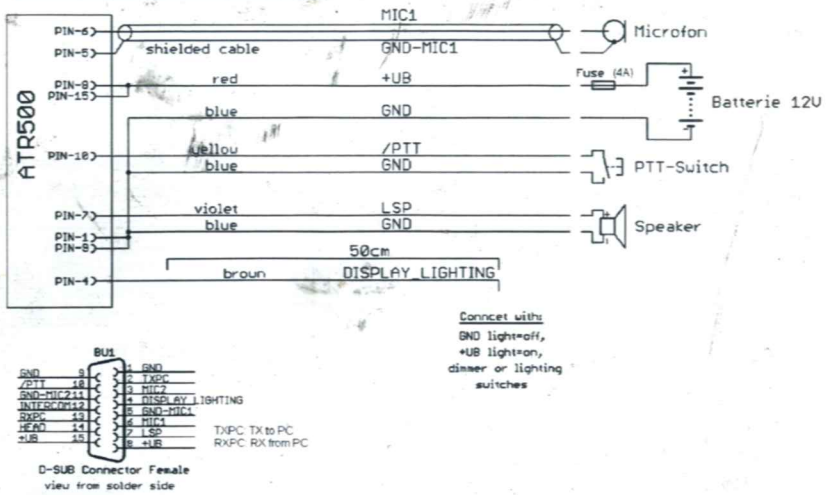

⚠	For connection of „DISPLAY_LIGHTING“ (PIN4) please refer to 3.6.3 Background Illumination

3.7.3 Wiring Double-Seater with Intercom

The depicted wiring diagram is performed with the cable sets BSKS500M1 (1 PTT-button) or BSKS500M2 (2 PTT buttons), which are available as accessory. Cable sets can be obtained from www.funkwerk-avionics.com.

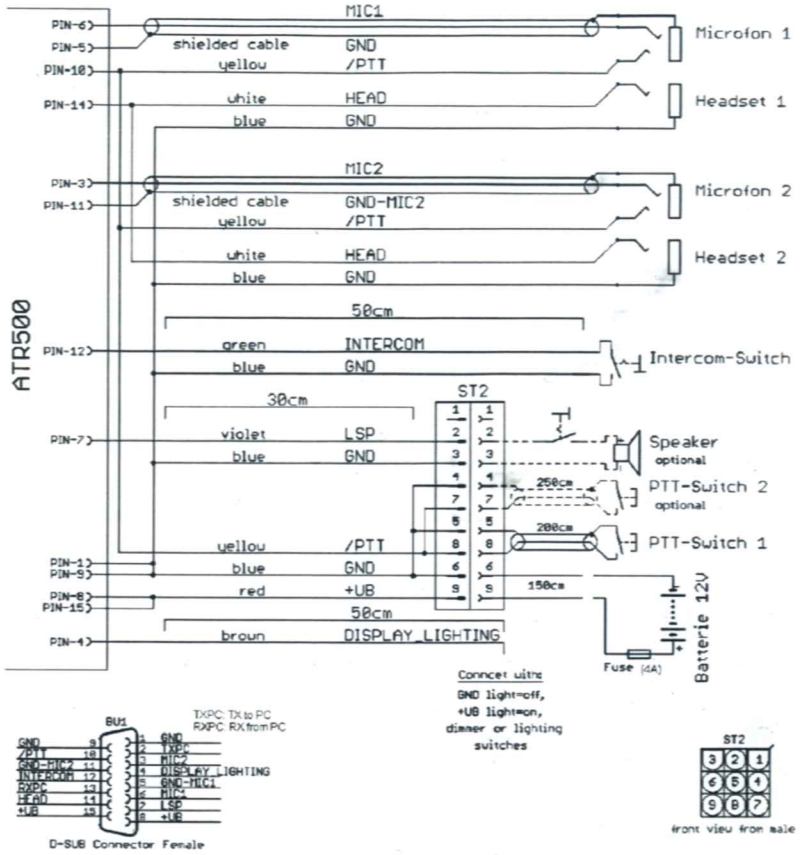

⚠	For connection of „DISPLAY_LIGHTING“ (PIN4) please refer to 3.6.3 Background Illumination

3.8 Antenna

3.8.1 Antenna Selection

- A VHF-COM-Antenna with an impedance of 50 Ohm is required.
- Choose an antenna type compatible with the vehicle and the mounting location.
- Specified features depend on proper installation of the antenna.

3.8.2 Installation Recommendation

- Take note of the antenna manufacturer's instructions.
- For installation in composite aircrafts, ground planes are to be added. The ground plane should be as large as possible but in any case not smaller than 10 cm x 10 cm. If in doubt, please contact the aircraft manufacturer.
- Keep away three feet from any other antenna
- Pursue mounting in vertical position under the belly in flight direction
- For installation in gliders the installed antenna should be used.

⚠	The HF antenna wire must not be included in any other cable sets, for example power supply or microphone. It must also not be placed together with other antenna wires, for example NAV or Transponder.

3.9 Microphone Settings

The settings of MIC and VOX values are essential for operation (MIC=microphone level see 2.8.1.1, VOX= threshold level see 2.4.3)

Using VOX the threshold level is adjusted so that usual flight noise is not transmitted to the headphones, but only an additional signal caused by speaking will start intercom operation.

With very strong background noise or uncompensated microphones VOX can be deactivated by setting VOX01. In this case intercom is activated using the intercom switch (not PTT), which connects pin 12 (intercom) of the equipment connector to GND. If required, e. g. in a tandem cockpit, use two parallel connected PTT keys.

For operating in VOX mode pin 12 has to be connected permanently to

GND. Transmission merely operates when PTT is pressed. The suppression of background noise is only possible using differential microphones, as they are usual with modern headsets. Normal electret microphones are not suitable.

3.10 Post-Installation Check

⚠	A certified maintenance shop must verify proper operation of the VHF Transceiver System.

When installation is completed all steering and control functions of the aircraft are to be examined, in order to exclude disturbances by the wiring.

The SWR shall not exceed 3:1.

Furthermore a test flight is recommended, in order to guarantee the proper in-flight operation of the radio:

- In a flight altitude of at least 1500 ft contact a ground station in a distance of at least 50 km (30 nautical miles).
- Pay attention to unusual electrical interference.
- If possible, perform the radio test on frequencies within the upper and lower VHF communication frequency range.

3.11 Starting Up

Turn the device on with ON OFF .

After start-up the following screens appear:

The Start Screen indicates device type and software version.

Dependent of the setting of the MEM/SET rotary knob either the selected memory position is indicated (for example M3)

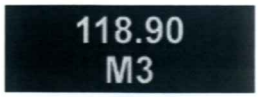

or the manual frequency setting mode appears:

3.12 Accessories

Suitable accessories like antennas, cable sets, connectors or switches can be purchased at our online shop on www.funkwerk-avionics.com.

3.13 Drawings

3.13.1 Dimensions

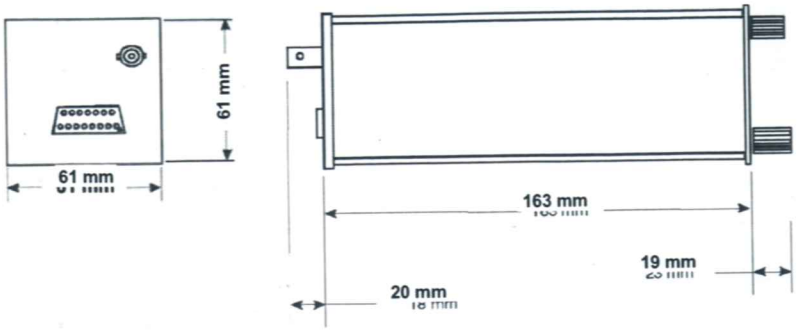

3.13.2 Mounting Advices

Connections Area

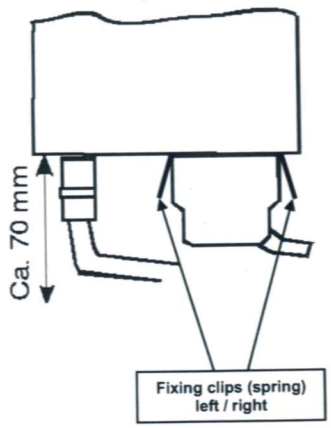

Panel Cut-out

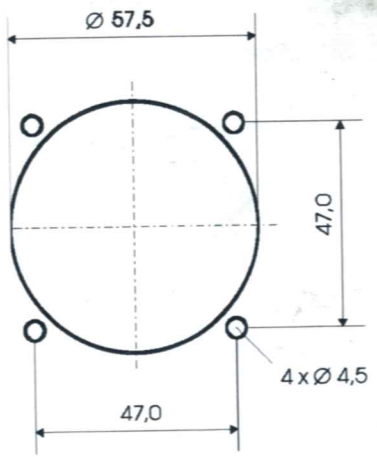

⚠	Connector (plug) has to be clamped with both spring locks

4 APPENDIX

4.1 Technical Data

GENERAL	
COMPLIANCE	JTSO-2C37e,ED-23B Class 4 JTSO-2C38e,ED-23B Class C TSO-C37d, RTCA DO-186A Class 4 TSO-C38d, RTCA DO-186A Class C LBA.O.10.911/113 JTSO
DIMENSIONS	Height: 61 mm (2,4 in) Width: 61 mm (2,4 in) Length: 185 mm (7,4 in) behind the panel
WEIGHT	1,1 lbs (0,49 kg)
MOUNTING	Panel Mounted
TEMPERATURE RANGES OPERATION STORAGE	 -20 °C ... +55 °C, +70 °C for 30 minutes -55 °C .. +85 °C
POWER SUPPLY	14 VDC (9 VDC .. 18 VDC)
CURRENT CONSUMPTION	Transmitter: 2,8 A Receiver: 0,1A (Standby),max. 0,5A
FUSE	External fuse required: 4 A, slow blow
FREQUENCY RANGE	118,000 MHz .. 136,975 MHz
FREQUENCY STABILITY	±30 ppm for -20 °C .. + 55 °C

TRANSMITTER	
POWER OUTPUT	6 W (nominal) 4 W (minimal)
MODULATION	70 % Modulation Capacity with 98% Limitation. Distortion Factor< 10 % at 70 % Modulation
SIDETONE OUTPUT	100 mW at 500 Ω (Headset Output)
MICROPHONE	Standard Microphone with 100 mVRMS at MIC 1 or MIC 2 or dynamic Microphone (MIC 1 switchable)
DUTY CYCLE	2 minutes on, 4 minutes off; Transmitter automatically switches off after 2 minutes permanent transmission
RECEIVER	
SENSITIVITY	-105 dBm (6 dB S+N/N, m = 30 % /1 kHz)
BANDWIDTH	-6-dB-Bandwidth > ±8.0 kHz
SELECTIVITY	-40-dB-Bandwidth < ±17.0 kHz
	-60-dB-Bandwidth < ±22.0 kHz
RECEIVER OUTPUT	≥4 W at 4 Ω (Speaker Output)
AGC CHARACTERISTICS	AF output deviation < 6 dB
	von 10 µV bis 10 mV
SQUELCH	Automatic Squelch (adjustable)
SPURIOUS RESPONSES	> 80 dB
INTERCOM-INPUT	The microphone is connected to the Intercom input. 100 mVRMS at the microphone input result in 100 mW output power at the headset output

4.2 Environmental Conditions

Characteristic DO–160D	Section	Cat	Condition
Temperature / Altitude	4.0	C1	
Low ground survival temperature	4.5.1		– 55°C
Low operating temperature	4.5.1		– 20°C
High ground survival Temperature	4.5.2		+ 85°C
High Short-time Operating Temperature	4.5.2		+ 70°C
High Operating Temperature	4.5.3		+ 55°C
In-Flight Loss of Cooling	4.5.4	Z	No auxiliary cooling required
Altitude	4.6.1	C1	35 000 ft
Temperature Variation	5.0	C	2°C change rate minimum per minute
Humidity	6.0	A	
Shock	7.0	A	6 G operational shocks 20 G Crash Safety Test Type R in all 6 directions
Vibration	8.0	S	Vibration Curve M
Explosion Proofness	9.0	X	No test required
Water Proofness	10.0	X	No test required
Fluids Susceptibilities	11.0	X	No test required
Sand and Dust	12.0	X	No test required
Fungus Resistance	13.0	X	No test required
Salt Spray	14.0	X	No test required
Magnetic Effect	15.0	Z	Less than 0,3 m Compass Safe Distance
Power Input (DC)	16.0	B	
Voltage Spike Conducted	17.0	A	
Audio Frequency Conducted Susceptibility	18.0	A	

Characteristic DO–160D	Section	Cat	Condition
Induced Signal Susceptibility	19.0	A	
Radio Frequency Susceptibility	20.0	YY	
Emission of RF Energy	21.0	M	
Lightning Induced Transient Susceptibility	22.0	B3 F3	
Lightning Direct Effects	23.0	X	No test required
Icing	24.0	X	No test required
Electrostatic Discharge (ESD)	25.0	A	